D-Sub Connector

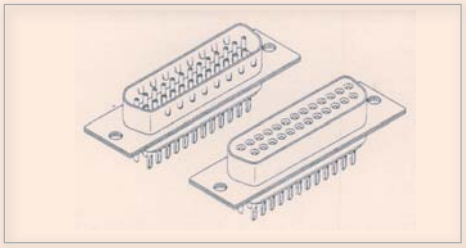

::: Specifications :::

Material	
Housing	30% Glass filled PBT UL94V-0
Contacts	Brass
Plating	GOld plated
Electrical Characteristics	
Current Rating	1 AMP
Insulator Resistance	5000MΩ min. at DC 500V
Contact Resistance	20MΩ max. at DC 100mA
Operating Temperature	-55°C~+105°C

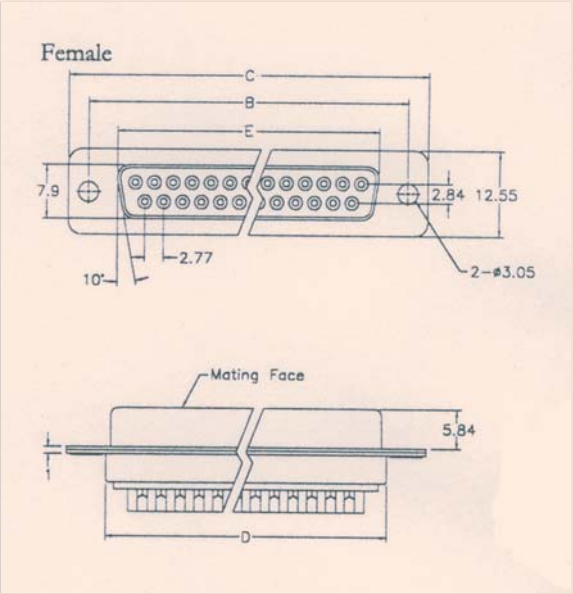

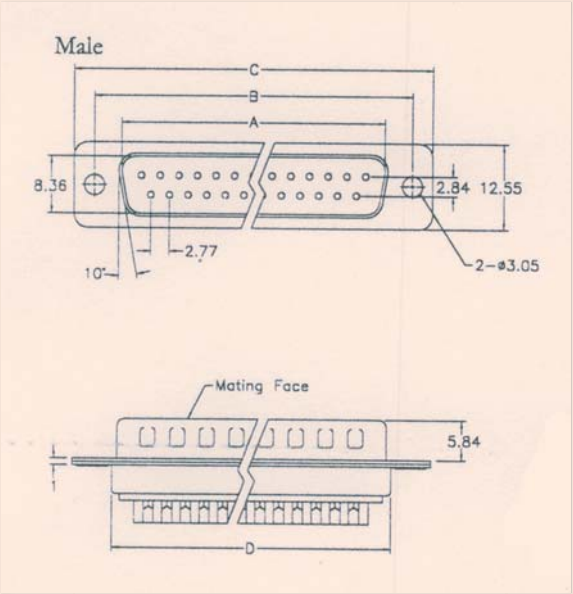

Position	Dimension				
	A	B	C	D	E
9	16.92	24.99	30.81	19.28	16.33
15	25.25	33.32	39.14	27.51	24.66
25	38.96	47.04	53.04	41.30	38.38
37	55.42	63.50	69.32	57.71	54.84
50	52.86	61.11	66.90	55.30	52.34